# PATTERN 10

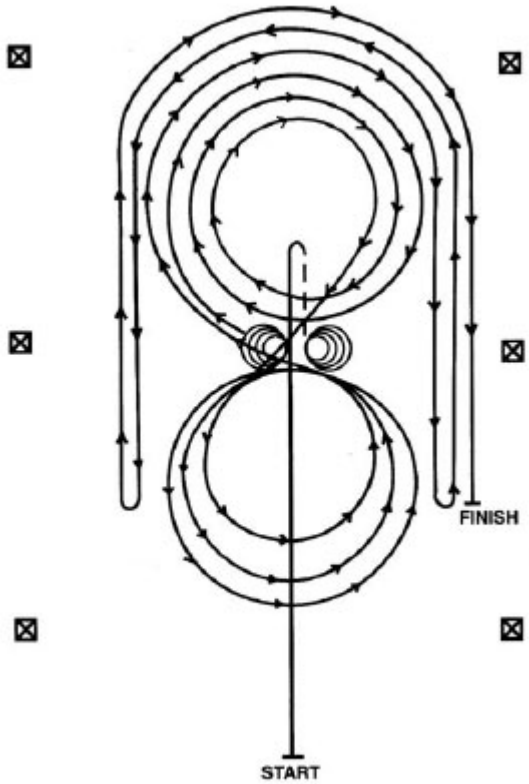


Beginning at the centre of the arena facing the far wall or fence.

1. Run past the centre marker and do a SLIDING STOP. BACK UP to the centre of the arena or at least ten feet (3 metres). HESITATE.

2. Complete FOUR SPINS to the RIGHT.

3. Complete FOUR and ONE-QUARTER SPINS to the LEFT so that the horse is facing the LEFT wall or fence. HESITATE.

4. Beginning on the RIGHT LEAD, complete three circles to the RIGHT; the first two circles large and fast, the third circle small and slow. CHANGE LEADS at the centre of the arena.

5. Complete three circles to the LEFT: the first circle small and slow, the next two circles large and fast. CHANGE LEADS at the centre of the arena.

6. Begin a large fast circle to the RIGHT but do not close this circle. Run down the RIGHT side of the arena past the marker and do a LEFT ROLLBACK at least twenty feet (6 metres) from the wall or fence – no hesitation.

7. Continue back around the previous circle but do not close this circle. Run down the LEFT side of the arena past the centre and do a RIGHT ROLLBACK at least twenty feet (6 metres) from the wall or fence – no hesitation.

8. Continue back around previous circle but do not close this circle. Run down the RIGHT side of the arena past the centre marker and do a SLIDING STOP at least twenty feet (6 metres) from the wall or fence. HESITATE to demonstrate completion of pattern.

Rider must dismount and drop bridle to the designated judge.

Victorian REINING HORSE ASSOCIATION INC.

VRHA